MTE 481 - PRELIMINARY DESIGN PRESENTATION

10/22/2025

BALLIN

Capstone Group 52

Chanuth Weeraratna, Samuel Mpoloka, Adesh Partap Singh, Joseph Bagheri, Ameen Aydan

UNIVERSITY OF WATERLOO

PRESENTATION CONTENT

I. Needs Identification

II. Problem Definition

III. Design Specification (Criterion, Constraints, Objectives)

IV. Alternate Design Concepts

V. Selection Matrix

VI. Applicable Patent

VII. Timeline (Gantt chart)

NEEDS IDENTIFICATION

Hands Free Mobility

NEEDS IDENTIFICATION

- Wheelchair users engaged in day-to-day tasks are fundamentally limited by the need to use their hands for both propulsion and steering.
- What activities could always be more enjoyable or easier with access to both hands?
  - E.g. **Holding your kids' hands, opening a door, carrying groceries, etc**

Anecdotally:

- **Adrit Batra** from Laurier enjoys street hockey as a hobby but finds that his arms frequently fatigue, and injury is common in wheelchair sports.
- The “building up through repetition” nature of propulsion places loads that the shoulder was never optimized to bear over years. (Barry Mason, 2020)
- Constant switching between tasks also creates a steeper learning curve for many wheelchair sports, which was a deterrent for **Adrit Batra** before he took up the hobby.

NEEDS IDENTIFICATION

The Hidden Cost

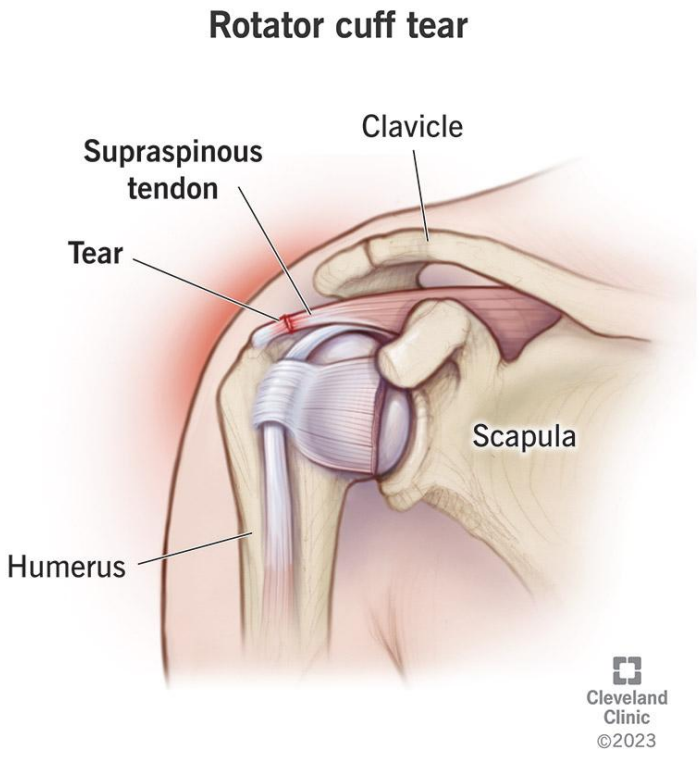

- A systematic review found that shoulder pain is the most frequent musculoskeletal complaint in wheelchair users, driven largely by overuse, tendinopathy, and rotator cuff tears (Shawn Song, 2022).
- Among wheelchair athletes, shoulder complaints are extremely common — reported prevalence ranges from 16% up to 76% across studies. (Omar W Heyward, 2017)
- In a study of 296 full-time manual wheelchair users, those playing sports more than 1–2×/week had 75.7% occurrence of rotator cuff tears, vs. 36.3% in non-sport users. (Michael Akbar, 2015)

NEEDS STATEMENT

Hands-free wheelchair for sports could open another avenue of enjoyment and reduce the rates of injury for wheelchair users engaged in hockey, basketball, or tennis, among other sports.

PROBLEM DEFINITION

PROBLEM DEFINITION

- Wheelchair users who are frequently engaged with sports must use their arms to propel, steer and handle the ball.
- The intensity and frequency of these movements leave the conventional wheelchair user vulnerable to injuries.
- The wheelchair also constrains the user's agility and natural gameplay, creating a larger learning curve and a reluctance to take up the sport.

PROBLEM DEFINITION

Will focus on basketball as the environment and objects of interaction are easy to define and much narrower in focus

USER REQUIREMENTS

Vague, non-measurable requirements tied to the user and count towards the selection matrix

- **Human-machine interface doesn't require input from the hands or arms**
- **Method of operation should not interfere with gameplay**
  - **E.g. the user takes their eyes off the ball**
- **Mimic the full range of motion of an able-bodied player: 2 degrees of translation and 1 degree of rotation**
  - **'mimic natural gameplay" problem def'n**
- **Control method should account for a varying range of disabilities**
- **Operation should be simple and intuitive**
  - **Including user control sensitivity adjustment**
- **Wheelchair should be safe for the user to operate and those around them**
  - **Failsafe measures**
  - **Speed limiter**
  - **Passive and/or active protection from collisions**
  - **Emergency stop**

UNIVERSITY OF WATERLOO

Engineering Requirements

Criterion #1

- Weight capacity should accommodate 50th to 95th percentile man (Weight Percentile Calculator)

50th – percentile weight	**Approx 80kg**
95th –percentile weight	Approx 110kg

UNIVERSITY OF WATERLOO

Engineering Requirements

Criterion #2

- The wheelchair itself must not get in the way when handling game objects (e.g. basketballs, hockey stick)
  - Justified as the length outside a cross section to touch a ball
- 90th – percentile hip breadth is 36.82 cm - Objective
- 50th – percentile grip reach is 74.95 cm - Constraint

CDC Anthropometric Reference Data

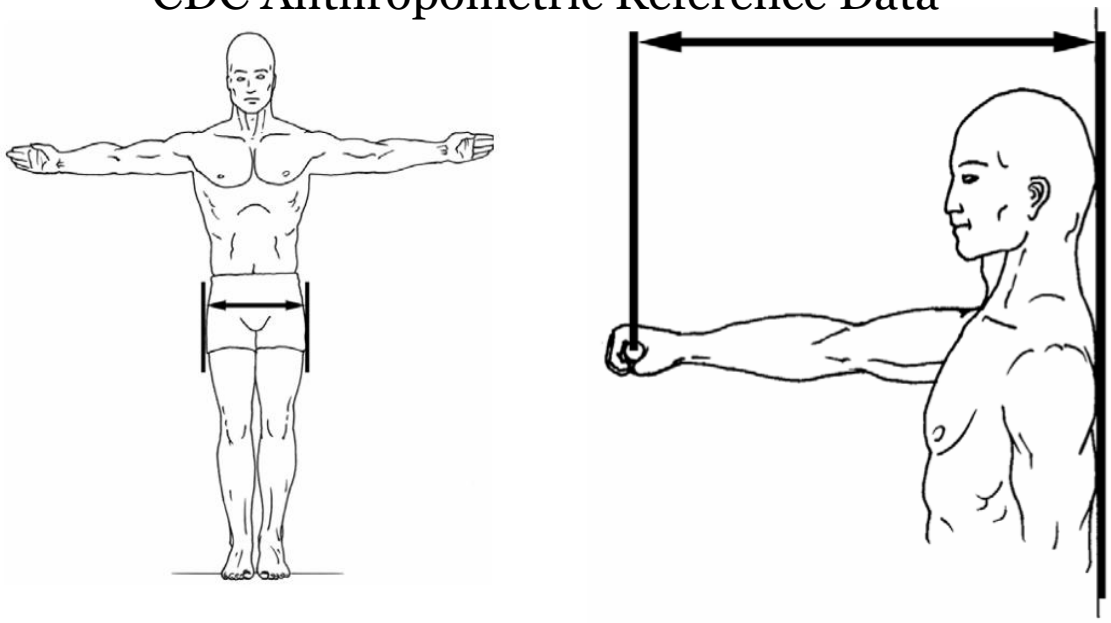

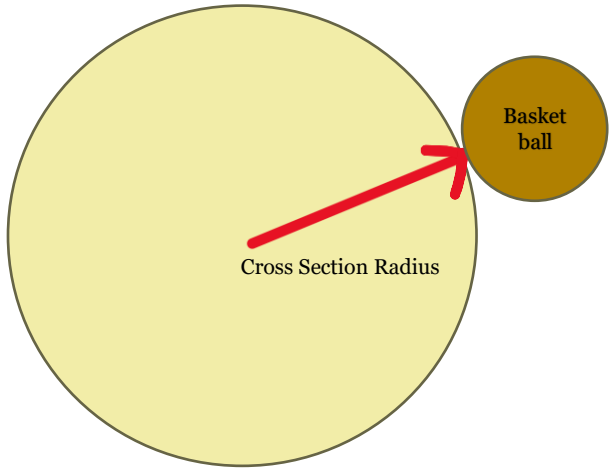

Cross section Radius = Arm length - basketball diameter

UNIVERSITY OF WATERLOO

Engineering Requirements

Criterion	Constraint	Objective
Max Speed	2.3 m/s	4.75 m/s
Acceleration	0.7 m/s/s	1.3 m/s/s
Angular velocity	Implied in above criteria	
Stopping distance		

Criterion #3

- More aggressive performance specifications are better for use in a basketball sports
- Metrics shown are meant for all directions of travel
- Justified in the following studies
  - Dynamics of wheelchair basketball (K D Coutts, 1992)
  - Drag and sprint performance of wheelchair basketball players (K D Coutts, 1992)
  - Low profile, omni-directional stool
    - What has already been achieved

UNIVERSITY OF WATERLOO

Engineering Requirements

Criterion #4

- A faster response time is better
- Human reaction time ≈ 220 ms
- Basketball player reaction ≈ 180 ms
- Sensor → Controller → Actuator
  - latency should aim for 40ms

Criterion #5

- Operating time should aim for the duration of a full game of basketball (40 mins)
- This metric will have a minimum of 12 mins per basketball game quarter

Engineering Requirements – Criteria Table

#	Criterion	Constraint	Objective
1	Weight	80kg	110kg
2	Footprint Radius	60cm	40cm
3	Max Speed	2.3 m/s	4.75 m/s
3	Acceleration	0.7 m/s/s	1.3 m/s/s
4	Sensor to actuation latency	40ms	-
5	Total Operating Time	12mins	40mins

UNIVERSITY OF WATERLOO

ALTERNATIVE DESIGNS & SELECTION MATRIX

ALTERNATE DESIGNS CONSIDERED

Alternative 1: Omni-directional Ball Drive System

- **Description**: Single large ball mechanism providing 360° movement capability through body weight shifting
- **Engineering Strengths**: True omni-directional movement, intuitive control, compact design, minimal external protrusions
- **Engineering Weaknesses**: Complex mechanical system, potential stability challenges, high manufacturing cost, maintenance requirements

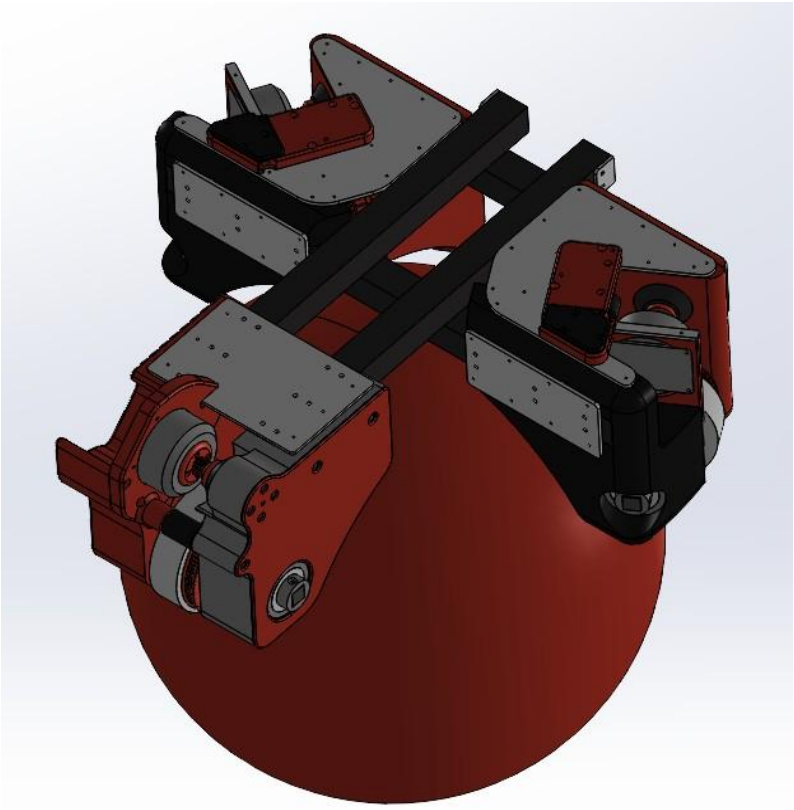

UNIVERSITY OF WATERLOO

ALTERNATE DESIGNS CONSIDERED

Alternative 2: Segway-Style Self-Balancing Platform

- **Description**: Two-wheel self-balancing system with gyroscopic stabilization and lean-to-steer control
- **Engineering Strengths**: Proven technology, responsive control, excellent stability, established manufacturing
- **Engineering Weaknesses**: Limited to forward/backward movement, requires continuous power, complex electronics, limited sports compatibility

ALTERNATE DESIGNS CONSIDERED

Alternative 3: Mecanum Wheel System

- **Description**: Four wheels with rollers at 45° angles enabling omni-directional movement through differential drive
- **Engineering Strengths**: Precise control, good load distribution, proven in robotics, modular design
- **Engineering Weaknesses**: Complex wheel design, maintenance intensive, limited to smooth surfaces, high manufacturing cost

ALTERNATE DESIGNS CONSIDERED

Alternative 4: Track-Based System with Pivot Mechanism

- **Description**: Continuous track system with central pivot for rotation, tank-style movement with independent track control
- **Engineering Strengths**: Excellent traction, simple control logic, robust design, low maintenance
- **Engineering Weaknesses**: Limited to 2 DOF movement, turning radius limitations, high friction, poor surface compatibility

DESIGN SELECTION WEIGHTING JUSTIFICATION

Criteria	Weight	Importance	Rationale
Hands-Free Operation	25%	Primary requirement for sports applications and day-to-day tasks	Enables simultaneous equipment handling during gameplay
Non-Interfering Controls	20%	Critical for equipment handling and gameplay	Control method must not distract from sports performance
Design Complexity	20%	Essential for manufacturability and maintenance	Simpler designs reduce fabrication costs and improve reliability
Inherit Stability	15%	Important for safety and user confidence	Natural stability reduces control complexity and power requirements
Safety Operation	10%	Fundamental requirement for user protection	System must maintain stability during collisions
Intuitive Operation	5%	Important for user adoption and training	Natural control methods reduce learning curve
Full Mobility Range	5%	Desired but secondary to core functionality	Omni-directional movement provides competitive advantage

DESIGN SELECTION MATRIX

Criteria	Weight	Ball Drive	**Segway**	**Mecanum**	**Track System**
Hands-Free Operation	25%	9	8	9	7
Non-Interfering Controls	20%	9	7	8	7
Design Complexity	20%	7	6	5	8
Inherent Stabilit	15%	8	9	7	9
Safety Operation	10%	8	9	8	9
Intuitive Operation	5%	9	8	7	8
Full Mobility Range	5%	10	6	10	6
Weighted Score		**8.3**	**7.5**	7.7	7.7

RELEVANT PATENTS

Joseph and Adesh

PATENT REVIEW

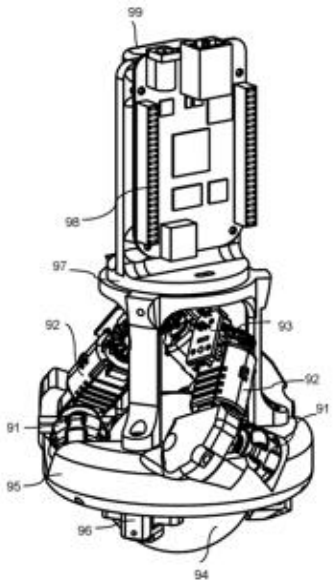

US20180022197A1
Multi-Dir Device

Patent Application Publication Mar. 3, 2022 Sheet 3 of 10 US 2022/0062075 A1

U.S. Patent Dec. 7, 2010 Sheet 3 of 7 US 7,847,504 B2

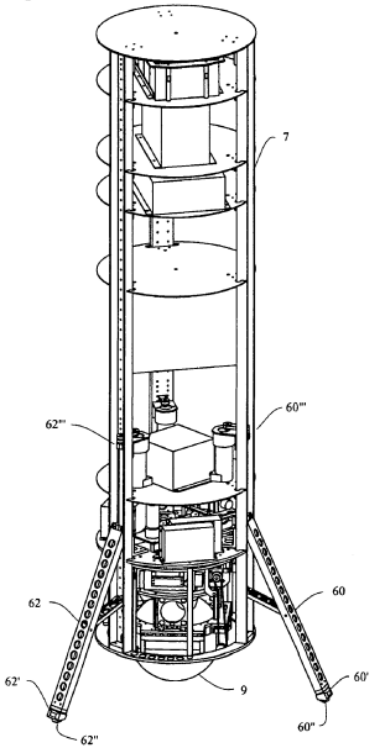

FIG. 2B

UNIVERSITY OF WATERLOO

LOW-PROFILE AND HIGH-LOAD BALL-BALANCING ROLLING SYSTEM

- This patent, US12,048,655B2, describes a **low-profile, high-load, a hands-free ball-balancing omnidirectional rolling system** designed by the University of Illinois.
- It is designed as an intuitive and self-balancing **mobility device** for a person with **lower-limb disabilities**.
- The system offers **omnidirectional motion** (360 degrees) and **advanced driving assistance** features like obstacle avoidance and semi-autonomous navigation.
- **This patent shows the constraints needed to:**
  - maintain stability while being hands-free.
  - ensure safety in case of power shut down.
- **This patent also shows a potential room for innovation:**
  - In increasing the motor speeds for sports usage.
  - Alternative motor contact angles on the sphere

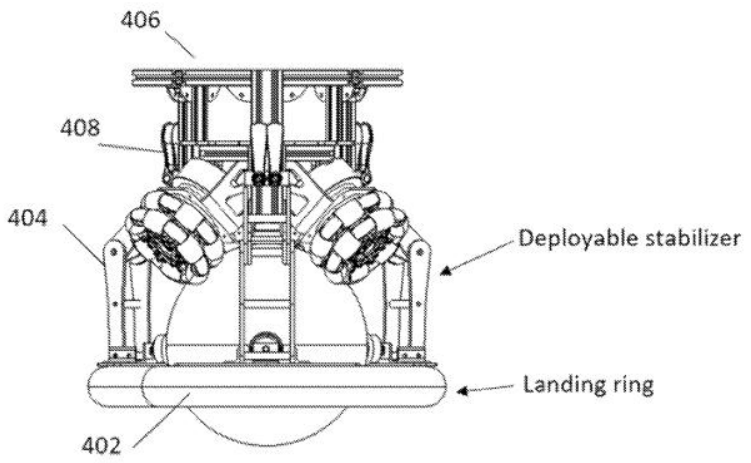

Fig. 4

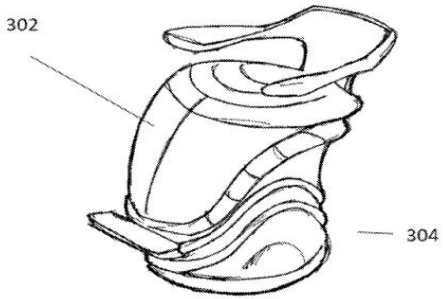

Fig. 3

UNIVERSITY OF WATERLOO

Single wheeled robot Balancing robot, Patent: US 7,847,504B2

- **This patent shows the constraints needed to:**
  - Move the ball using an inverted mouse drive and pulley system
  - Demonstrates useful initial opposite motion needed to get the angular tilt needed to go in that direction
  - Good orientation of motor contact to simplify motion

- **This patent also shows a potential room for innovation:**
  - Changing the design to meet a wheelchair application

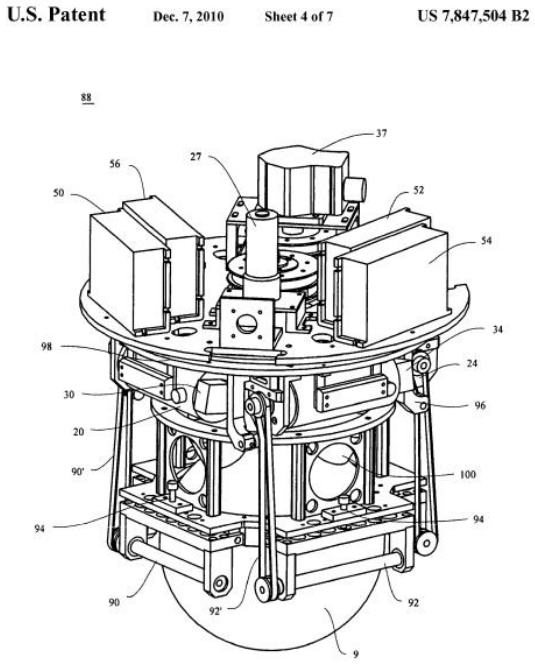

FIG. 3A

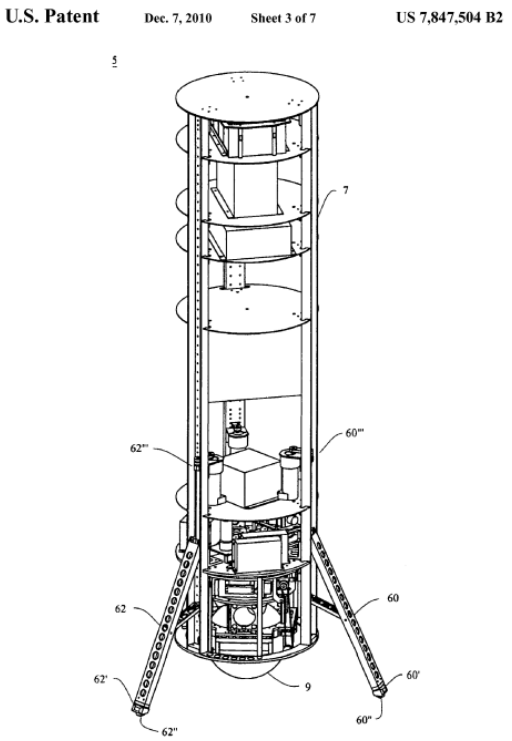

FIG. 2B

UNIVERSITY OF WATERLOO

BALL - BALANCING ROBOT AND DRIVE ASSEMBLY

- The application discloses a **Ball-Balancing Robot (BBR)** and its **drive assembly** designed for dynamic stability and mobility.
- The key innovation is the drive assembly, which utilizes **three omniwheel assemblies** positioned at **120° radial spacings** with their planes of rotation being **mutually-orthogonal**.
- This orthogonal arrangement effectively **decouples the wheel motion** for independent control and reduces the chance of slippage by contacting the ball in the **mid-latitude range** (near the equator).

- **This patent shows the constraints needed to:**
  - Properly control and stabilizes the robot with the control system displayed
  - Reduce angular slippage using a particular tilt in the roller wheels
  - Enable twist motion as well

- **This patent also shows a potential room for:**
  - Changing the contact angle of the motor driving wheels on the ball further to simplify control system design

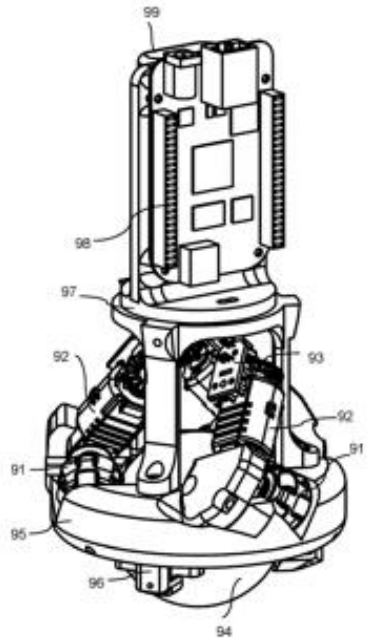

US20180022197A1
Multi-Dir Device

UNIVERSITY OF WATERLOO

TIMELINE

Gantt chart

Completed Tasks

Progress

Not Started or Planned

Important Event

	Month 1 (Sep)	Month 2 (Oct)	Month 3 (Nov)	Month (Dec)	Month 5 (Jan)	Month 6 (Feb)	Month 7 (Mar)
Idea Generation							
Preliminary Design							
PDP Presentation							
Design Refinement							
Detailed Design							
Design Verification							
Final Presentation							
Fabrication							
Assembly & Testing							
Symposium							